arXiv:quant-ph/0112106v1 18 Dec 2001

Approximate quantum error correction

Benjamin Schumacher[(1)] and Michael D. Westmoreland[(2)]

February 1, 2008

[(1)] *Department of Physics, Kenyon College, Gambier, OH 43022 USA*
[(2)] *Department of Mathematical Sciences, Denison University, Granville, OH 43023 USA*

Abstract

The errors that arise in a quantum channel can be corrected perfectly if and only if the channel does not decrease the coherent information of the input state. We show that, if the loss of coherent information is small, then *approximate* quantum error correction is possible.

1 Perfect quantum error correction

The problem of quantum information transfer via a channel can be cast as the problem of sending quantum entanglement using the channel [1]. Suppose R and Q are subsystems of a composite quantum system initially in a pure entangled state $\left|\Psi^{RQ}\right\rangle$. This state has a Schmidt decomposition

$$\left|\Psi^{RQ}\right\rangle = \sum_k \sqrt{\lambda_k}\left|k^R\right\rangle \otimes \left|k^Q\right\rangle \tag{1}$$

where the $\{\left|k^R\right\rangle\}$ and $\{\left|k^Q\right\rangle\}$ are orthonormal sets of R and Q states, respectively.

System Q is transmitted from the sender to the receiver via a noisy channel while R remains isolated at the sender's end. In the noisy case, the

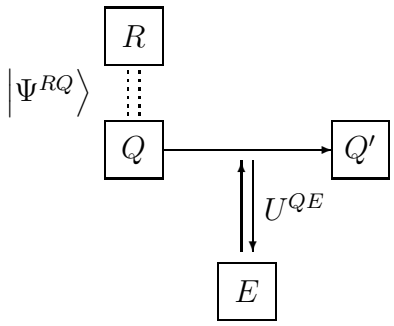

Figure 1: Composite system RQ is initially in the entangled state $\left|\Psi^{RQ}\right\rangle$. The evolution of system Q includes interaction with the environment E.

evolution of Q involves a unitary interaction with an environment system E (initially in some state $\left|0^E\right\rangle$), leading to a final joint state

$$\left|\Psi^{RQE'}\right\rangle = \left(1^R \otimes U^{QE}\right)\left|\Psi^{RQ}\right\rangle \otimes \left|0^E\right\rangle. \tag{2}$$

The (mixed) states of various subsystems are obtained by partial traces. The net effect of the interaction of Q with E is that the evolution of Q by itself is described by a superoperator $\mathcal{E}^Q$.

An error correction procedure is an operation that is performed by the receiver (and thus on Q) with the aim of restoring the output state $\rho^{RQ'}$ of RQ to the input state $\left|\Psi^{RQ}\right\rangle$. Of course, this is not always possible. Schumacher and Nielsen [2] provided a necessary and sufficient condition for the existence of a perfect error correction procedure—that is, one that exactly restores the input state. This condition is based on the coherent information of the process.

The coherent information I is defined to be

$$I = S^{Q'} - S^{RQ'} \tag{3}$$

where $S^{Q'}$ and $S^{RQ'}$ are the von Neumann entropies of the systems Q and RQ after the evolution: $S(\rho) = -\mathrm{Tr}\,\rho\log\rho$. The coherent information $I \leq S^Q$ (the initial entropy of entanglement between R and Q), since

$$S^Q - I = S^Q + S^{RQ'} - S^{Q'} = S^{R'} + S^{E'} - S^{RE'} \geq 0 \tag{4}$$

by the subadditivity of the entropy. (We have also used the fact that the overall state of RQE is always a pure state, and that the "reference" system R never interacts with anything.)

Perfect quantum error correction means that an operation on Q alone can restore the joint state of RQ to the original state $\left|\Psi^{RQ}\right\rangle$ with fidelity equal to unity. In [2] it is shown that perfect quantum error correction is possible if and only if $I = S^Q$.

"Only if" follows from the fact that the coherent information I cannot be increased by any subsequent quantum data processing; thus, any non-zero loss of coherent information (that is, any positive decoherence D) can never be restored. The "if" part is more interesting. By Equation 4 we see that $I = S^Q$ implies that $S^{R'} + S^{E'} = S^{RE'}$. This is only true when RE is in a product state:

$$\rho^{RE'} = \rho^{R'} \otimes \rho^{E'}. \tag{5}$$

Since the overall final state of RQE is pure, we can write it as

$$\left|\Psi^{RQE'}\right\rangle = \sum_{kl} \sqrt{\lambda_k \mu_l} \left|k^R\right\rangle \otimes \left|\phi_{kl}^Q\right\rangle \otimes \left|l^E\right\rangle. \tag{6}$$

Here the λ_k are the eigenvalues of ρ^R (unchanged by the dynamics) and the μ_l and $\left|l^E\right\rangle$ are the eigenvalues and eigenstates of $\rho^{E'}$. The states $\left|\phi_{kl}^Q\right\rangle$ are orthonormal.

We can exploit the structure of $\left|\Psi^{RQE'}\right\rangle$ given in Equation 6 to construct an error-correction procedure for Q. First, we make an incomplete ideal projective measurement on Q, where the projection operators are given by

$$\Pi_l = \sum_k \left|\phi_{kl}^Q\right\rangle\left\langle\phi_{kl}^Q\right|. \tag{7}$$

The outcome l of this measurement on the state $\left|\Psi^{RQE'}\right\rangle$ will occur with probability μ_l, and the resulting state will be

$$\left|\psi_l^{RQE'}\right\rangle = \sum_k \sqrt{\lambda_k} \left|k^R\right\rangle \otimes \left|\phi_{kl}^Q\right\rangle \otimes \left|l^E\right\rangle. \tag{8}$$

We now make a unitary transformation of Q that is conditional on the measurement outcome. If the outcome is l, we apply a unitary operator U_l such that

$$U_l \left|\phi_{kl}^Q\right\rangle = \left|k^Q\right\rangle. \tag{9}$$

After this transformation, the final state is

$$U_l \left|\psi_l^{RQE'}\right\rangle = \left(\sum_k \sqrt{\lambda_k} \left|k^R\right\rangle \otimes \left|k^Q\right\rangle\right) \otimes \left|l^E\right\rangle \tag{10}$$

and so the state of RQ has been perfectly restored to $\left|\Psi^{RQ}\right\rangle$.

If we can perfectly restore $\left|\Psi^{RQ}\right\rangle$ by this procedure, then the same procedure will allow us to restore any pure state $\left|\phi^Q\right\rangle$ in the support of $\rho^Q = \mathrm{Tr}_R \left|\Psi^{RQ}\right\rangle\left\langle\Psi^{RQ}\right|$. The converse is also true; that is, the problem of faithfully transmitting the entanglement between R and Q is equivalent to the problem of sending an arbitrary pure state of Q through the channel.

We now turn to our main question. Suppose $I < S^Q$, but the difference between them is small. Perfect quantum error correction is not possible, but it seems plausible that *nearly* perfect error correction is. With what fidelity can we restore the original state $\left|\Psi^{RQ}\right\rangle$ by an error correction procedure on Q? To answer this, we will first describe the connections between various measures of the "closeness" of two quantum states, with the goal of forging a link between an entropic measure of closeness (related to the coherent information) and fidelity.

2 Distance measures

The relative entropy function $\mathcal{S}(\rho||\sigma)$ between two density operators ρ and σ is defined to be

$$\mathcal{S}(\rho||\sigma) = \mathrm{Tr}\,\rho\log\rho - \mathrm{Tr}\,\rho\log\sigma. \tag{11}$$

The relative entropy function is not a metric, but it does have some of the intuitive properties of a "distance" between density operators. For example, the relative entropy is never negative, and is zero if and only if $\rho = \sigma$.

The trace distance $D(\rho,\sigma)$ is a metric on the set of density operators. It is defined by

$$D(\rho,\sigma) = \frac{1}{2}\,\mathrm{Tr}\,|\rho-\sigma|, \tag{12}$$

where the factor of one-half is chosen to agree with the definition in [3].

If ρ is a density operator, then $|\psi_\rho\rangle$ represents a *purification* of ρ–that is, a pure state of a larger system which reduces to the state ρ under partial

trace. A given density operator ρ has many purifications $|\psi_\rho\rangle$. The fidelity $F(\rho, \sigma)$ between two density operators is

$$F(\rho, \sigma) = \max |\langle \psi_\rho | \psi_\sigma \rangle| \tag{13}$$

where the maximum is taken over all choices of purifications $|\psi_\rho\rangle$ and $|\psi_\sigma\rangle$. (Equivalently, we may fix one of the purifications $|\psi_\rho\rangle$ and maximize only over the other one.) The fidelity satisfies

$$0 \leq F(\rho, \sigma) \leq 1, \tag{14}$$

with the fidelity equal to unity if and only if $\rho = \sigma$. Relative entropy, trace distance, and fidelity all provide measures of the "closeness" of two density operators.

Suppose $\mathcal{E}$ is a generalized quantum operation—that is, a trace-preserving completely positive map on density operators. Then all three notions of "closeness" are monotonic, in the following sense:

$$\begin{array}{rcl} \mathcal{S}(\mathcal{E}(\rho)||\mathcal{E}(\sigma)) & \leq & \mathcal{S}(\rho||\sigma) \\ D(\mathcal{E}(\rho), \mathcal{E}(\sigma)) & \leq & D(\rho, \sigma) \\ F(\mathcal{E}(\rho), \mathcal{E}(\sigma)) & \geq & F(\rho, \sigma). \end{array} \tag{15}$$

In [3], it is shown that the trace distance is related to the fidelity $F(\rho, \sigma)$ between the two density operators:

$$F(\rho, \sigma) \geq 1 - D(\rho, \sigma). \tag{16}$$

Thus, two density operators that are "close" in trace distance are also "close" in fidelity.

Now we will show that relative entropy and trace distance are related by

$$\mathcal{S}(\rho||\sigma) \geq \frac{2}{\ln 2} \left(D(\rho, \sigma)\right)^2. \tag{17}$$

To prove Equation 17, first suppose that we perform a fixed measurement on a system that may be either in state ρ or state σ, leading to probability distributions $\vec{P}$ and $\vec{Q}$, respectively. Then the classical relative entropy of the probability distributions is no greater than the quantum relative entropy of the density operators:

$$\mathcal{S}(\rho||\sigma) \geq \mathcal{H}\left(\vec{P}||\vec{Q}\right) \tag{18}$$

where $\mathcal{H}\left(\vec{P}||\vec{Q}\right)$ is the classical relative entropy function

$$\mathcal{H}\left(\vec{P}||\vec{Q}\right) = \sum_k P_k \log P_k \, - \, \sum_k P_k \log Q_k. \tag{19}$$

Equation 18 is true be cause the measurement process, leading to classically distinguishable states of the measuring apparatus, is a generalized quantum operation. The relative entropy cannot increase in this process. In [4] it is shown that, given two probability distributions $\vec{P}$ and $\vec{Q}$,

$$\mathcal{H}\left(\vec{P}||\vec{Q}\right) \geq \frac{1}{2\ln 2}\left(\sum_k |P_k - Q_k|\right)^2. \tag{20}$$

Next, consider the operator $\rho - \sigma$. This operator can be written

$$\rho - \sigma = A - B$$

where A and B are positive operators such that $\operatorname{supp} A$ and $\operatorname{supp} B$ are orthogonal subspaces. Notice that $\operatorname{Tr} A = \operatorname{Tr} B$. Let Π be the projection onto the support of A. Then $|\rho - \sigma| = A + B$ and

$$\begin{aligned} D(\rho,\sigma) &= \frac{1}{2}\operatorname{Tr}|\rho-\sigma| \\ &= \frac{1}{2}(\operatorname{Tr} A + \operatorname{Tr} B) \\ &= \operatorname{Tr} A \\ &= \operatorname{Tr}\Pi(\rho-\sigma). \end{aligned}$$

Suppose we perform the projective measurement corresponding to Π and $1-\Pi$. If our state is ρ, we obtain probabilities $P_1 = \operatorname{Tr}\Pi\rho$ and $P_2 = 1 - P_1$. If our state is σ, we obtain $Q_1 = \operatorname{Tr}\Pi\sigma$ and $Q_2 = 1 - Q_2$. Then by the definition of Π,

$$\begin{aligned} P_1 - Q_1 &= \operatorname{Tr}\Pi(\rho-\sigma) \\ &\geq 0 \\ P_2 - Q_2 &= \operatorname{Tr}(1-\Pi)(\rho-\sigma) \\ &= -\operatorname{Tr}\Pi(\rho-\sigma) \end{aligned}$$

and thus

$$\sum_k |P_k - Q_k| = 2\operatorname{Tr}\Pi(\rho-\sigma) = 2\,D(\rho,\sigma). \tag{21}$$

Combining this with Equations 18 and 20 we obtain

$$\mathcal{S}\left(\rho||\sigma\right) \geq \frac{2}{\ln 2}\left(D(\rho,\sigma)\right)^2$$

which is Equation 17, as desired.

In terms of fidelity, we have

$$F(\rho,\sigma) \geq 1 - \sqrt{\frac{\ln 2}{2}\,\mathcal{S}\left(\rho||\sigma\right)} \geq 1 - \sqrt{\mathcal{S}\left(\rho||\sigma\right)}.$$

Thus, if $\mathcal{S}\left(\rho||\sigma\right) < \epsilon$, then $F(\rho,\sigma) > 1 - \sqrt{\epsilon}$. States that are close in the relative entropy sense are also close in fidelity.

3 Approximate error correction

We now return to our discussion of approximate error correction in a quantum channel in which the coherent information I is only slightly less than S^Q, the initial entropy of entanglement of RQ. To make the question precise, suppose that $S^Q - I < \epsilon$. With what fidelity can we restore the initial state $\left|\Psi^{RQ}\right\rangle$ by an operation on Q?

We first note that

$$\begin{aligned} S^Q - I &= S^{R'} + S^{E'} - S^{RE'} \\ &= \mathcal{S}\left(\rho^{RE'}||\rho^{R'}\otimes\rho^{E'}\right). \end{aligned} \tag{22}$$

Thus our hypothesis reduces to

$$\mathcal{S}\left(\rho^{RE'}||\rho^{R'}\otimes\rho^{E'}\right) < \epsilon.$$

The state $\rho^{RE'}$ is not a product state, but it is close (in the relative entropy sense) to the product state $\rho^{R'}\otimes\rho^{E'}$. We can therefore assert that the fidelity

$$F(\rho^{RE'},\rho^{R'}\otimes\rho^{E'}) > 1 - \sqrt{\epsilon}.$$

The actual final state $\left|\Psi^{RQE'}\right\rangle$ of the overall system RQE is a purification of $\rho^{RE'}$. Denote by $\left|\hat{\Psi}^{RQE'}\right\rangle$ a specific purification of $\rho^{R'}\otimes\rho^{E'}$ for which

$$F(\rho^{RE'},\rho^{R'}\otimes\rho^{E'}) = \left|\left\langle\Psi^{RQE'}\left|\hat{\Psi}^{RQE'}\right\rangle\right|. \tag{23}$$

(Such a purification must, of course, exist by our definition of the fidelity.) Since $\rho^{R'} \otimes \rho^{E'}$ is a product state, this purification has the form

$$\left|\hat{\Psi}^{RQE'}\right\rangle = \sum_{kl} \sqrt{\lambda_k \mu_l} \left|k^R\right\rangle \otimes \left|\phi_{kl}^Q\right\rangle \otimes \left|l^E\right\rangle, \tag{24}$$

Because this state has exactly the same form as the one in Equation 6, we can as before construct an error correction operation on Q that would exactly restore the state $\left|\hat{\Psi}^{RQE'}\right\rangle$ to the original entangled state $\left|\Psi^{RQ}\right\rangle$ on RQ. Denote this operation by $\mathcal{E}^Q$.

We do not actually have the product state purification $\left|\hat{\Psi}^{RQE'}\right\rangle$. Instead, we have the nearby final state $\left|\Psi^{RQE'}\right\rangle$. However, we know that the fidelity between two states cannot be decreased by any operation. Therefore, if we apply the operation $\mathcal{E}^Q$ to the actual final state, we'll arrive at an error corrected state ω^{RQ} for RQ, such that

$$\begin{aligned} F(\omega^{RQ}, \left|\Psi^{RQ}\right\rangle) &\geq \left|\left\langle \Psi^{RQE'} \middle| \hat{\Psi}^{RQE'} \right\rangle\right| \\ &= F(\rho^{RE'}, \rho^{R'} \otimes \rho^{E'}) \\ &> 1 - \sqrt{\epsilon}. \end{aligned} \tag{25}$$

Therefore, if the coherent information decreases by less than ϵ, we can find an error correction procedure that restores the original entangled state with a fidelity greater than $1 - \sqrt{\epsilon}$.

The *entanglement fidelity* F_e of the channel (defined in [1]) is related to the fidelity discussed here by $F_e = F^2$. Thus, we have shown that it is possible to correct errors with entanglement fidelity

$$F_e > \left(1 - \sqrt{\epsilon}\right)^2 \geq 1 - 2\sqrt{\epsilon}. \tag{26}$$

We now see that the necessary and sufficient criterion for perfect quantum error correction derived in [2] is *robust*. If it is approximately satisfied, then errors can be approximately corrected. This result is likely to be more useful in analyzing the capacities of a quantum channel, since in general we would not require that the fidelity ever exactly equals unity, but only that it approaches unity asymptotically.

An approximate quantum error correction scheme has been presented by Barnum and Knill [5], though not in the context of small loss of coherent information. The relationship, if any, between their scheme and the one presented here is not known.

We are very grateful to M. A. Nielsen for comments and suggestions.

References

[1] B. Schumacher, em Phys. Rev. A **54**, 2614 (1996).

[2] B. Schumacher and M. A. Nielsen, *Phys. Rev. A* **54**, 2629 (1996).

[3] M. A. Nielsen and I. L. Chuang, *Quantum Computation and Quantum Information* (Cambridge University Press, Cambridge, 2000).

[4] T. M. Cover and J. A. Thomas, *Elements of Information Theory* (John Wiley and Sons, New York, 1991).

[5] H. Barnum and E. Knill, "Reversing quantum dynamics with near-optimum quantum and classical fidelity", preprint quant-ph/0004088.